UNIVERSITY OF CAMBRIDGE INTERNATIONAL EXAMINATIONS
General Certificate of Education Ordinary Level

ADDITIONAL MATHEMATICS **4037/21**

Paper 2 **October/November 2010**

2 hours

Additional Materials: Answer Booklet/Paper

READ THESE INSTRUCTIONS FIRST

If you have been given an Answer Booklet, follow the instructions on the front cover of the Booklet.
Write your Centre number, candidate number and name on all the work you hand in.
Write in dark blue or black pen.
You may use a soft pencil for any diagrams or graphs.
Do not use staples, paper clips, highlighters, glue or correction fluid.

Answer **all** the questions.
Write your answers on the separate Answer Booklet/Paper provided.
Give non-exact numerical answers correct to 3 significant figures, or 1 decimal place in the case of angles in degrees, unless a different level of accuracy is specified in the question.
The use of an electronic calculator is expected, where appropriate.
You are reminded of the need for clear presentation in your answers.

At the end of the examination, fasten all your work securely together.
The number of marks is given in brackets [ ] at the end of each question or part question.
The total number of marks for this paper is 80.

This document consists of **6** printed pages and **2** blank pages.

DC (NF/DJ) 25085/3
© UCLES 2010

UNIVERSITY of CAMBRIDGE International Examinations

[Turn over

www.exam-mate.com
WWW.XTREMEPAPERS.NET

Mathematical Formulae

1. ALGEBRA

Quadratic Equation

For the equation $ax^2 + bx + c = 0$,

$$x = \frac{-b \pm \sqrt{b^2 - 4ac}}{2a} .$$

Binomial Theorem

$$(a + b)^n = a^n + \binom{n}{1}a^{n-1} b + \binom{n}{2}a^{n-2} b^2 + \ldots + \binom{n}{r}a^{n-r} b^r + \ldots + b^n,$$

where n is a positive integer and $\binom{n}{r} = \frac{n!}{(n-r)!r!}$.

2. TRIGONOMETRY

Identities

$$\sin^2 A + \cos^2 A = 1$$

$$\sec^2 A = 1 + \tan^2 A$$

$$\operatorname{cosec}^2 A = 1 + \cot^2 A$$

Formulae for ΔABC

$$\frac{a}{\sin A} = \frac{b}{\sin B} = \frac{c}{\sin C}$$

$$a^2 = b^2 + c^2 - 2bc \cos A$$

$$\Delta = \frac{1}{2} bc \sin A$$

© UCLES 2010

WWW.XTREMEPAPERS.NET
www.exam-mate.com

1 Solve the equation $|2x + 10| = 7$. [3]

2 The expression $x^3 + ax^2 - 15x + b$ has a factor $x - 2$ and leaves a remainder of 75 when divided by $x + 3$. Find the value of a and of b. [5]

3 A number, N_0, of fish of a particular species are introduced to a lake. The number, N, of these fish in the lake, t weeks after their introduction, is given by $N = N_0 e^{-kt}$, where k is a constant. Calculate

(i) the value of k if, after 34 weeks, the number of these fish has fallen to $\frac{1}{2}$ of the number introduced, [2]

(ii) the number of weeks it takes for the number of these fish to have fallen to $\frac{1}{5}$ of the number introduced. [3]

4 Students take three multiple-choice tests, each with ten questions. A correct answer earns 5 marks. If no answer is given 1 mark is scored. An incorrect answer loses 2 marks. A student's final total mark is the sum of 20% of the mark in test 1, 30% of the mark in test 2 and 50% of the mark in test 3. One student's responses are summarized in the table below.

	Test 1	Test 2	Test 3
Correct answer	7	6	5
No answer	1	3	5
Incorrect answer	2	1	0

Write down three matrices such that matrix multiplication will give this student's final total mark and hence find this total mark. [5]

5 Find the set of values of m for which the line $y = mx - 2$ cuts the curve $y = x^2 + 8x + 7$ in two distinct points. [6]

www.exam-mate.com
WWW.XTREMEPAPERS.NET

6 A 4-digit number is formed by using four of the seven digits 1, 3, 4, 5, 7, 8 and 9. No digit can be used more than once in any one number. Find how many different 4-digit numbers can be formed if

(i) there are no restrictions, [2]

(ii) the number is less than 4000, [2]

(iii) the number is even and less than 4000. [2]

7

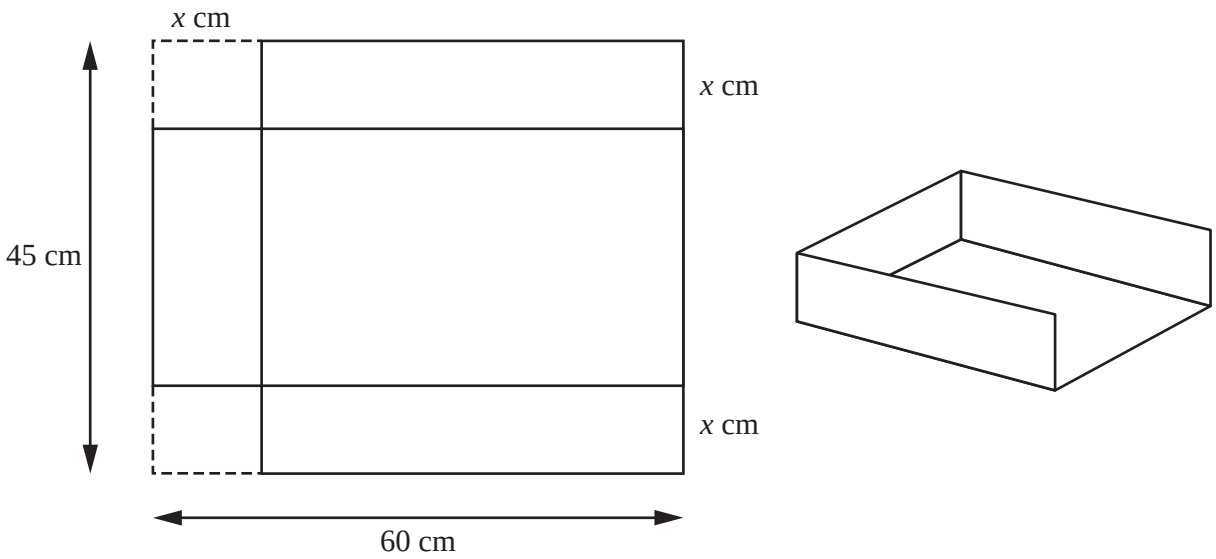

A rectangular sheet of metal measures 60 cm by 45 cm. A scoop is made by cutting out squares, of side x cm, from two corners of the sheet and folding the remainder as shown.

(i) Show that the volume, V cm^3, of the scoop is given by

$$V = 2700x - 165x^2 + 2x^3.$$ [2]

(ii) Given that x can vary, find the value of x for which V has a stationary value. [4]

8 Solve the equation

(i) $\lg(5x + 10) + 2\lg 3 = 1 + \lg(4x + 12)$, [4]

(ii) $\dfrac{9^{2y}}{3^{7-y}} = \dfrac{3^{4y+3}}{27^{y-2}}$. [3]

www.exam-mate.com

WWW.XTREMEPAPERS.NET

9 A plane, whose speed in still air is $250\,\text{kmh}^{-1}$, flies directly from A to B, where B is 500 km from A on a bearing of 060°. There is a constant wind of $80\,\text{kmh}^{-1}$ blowing from the south. Find, to the nearest minute, the time taken for the flight. [7]

10 Solutions to this question by accurate drawing will not be accepted.

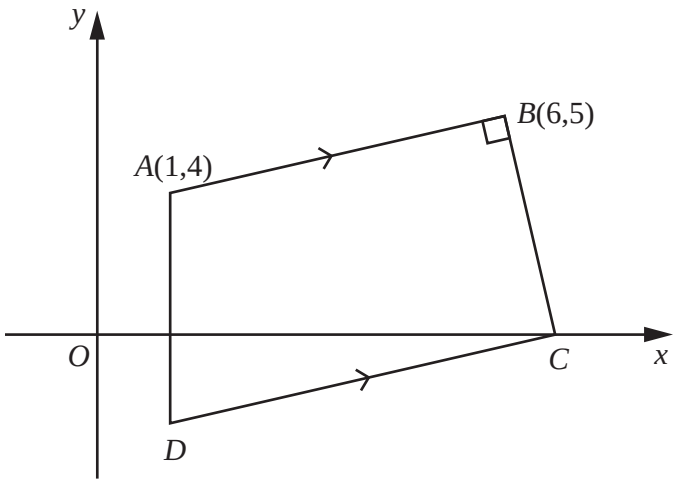

The diagram shows a quadrilateral $ABCD$ in which A is the point (1, 4) and B is the point (6, 5). Angle ABC is a right angle and the point C lies on the x-axis. The line AD is parallel to the y-axis and the line CD is parallel to BA. Find

(i) the equation of the line CD, [5]

(ii) the area of the quadrilateral $ABCD$. [4]

11 Solve the equation

(i) $5\sin x - 3\cos x = 0$, for $0° \leqslant x \leqslant 360°$, [3]

(ii) $2\cos^2 y - \sin y - 1 = 0$, for $0° \leqslant y \leqslant 360°$, [5]

(iii) $3\sec z = 10$, for $0 \leqslant z \leqslant 6$ radians. [3]

www.exam-mate.com
WWW.XTREMEPAPERS.NET

12 Answer only **one** of the following two alternatives.

EITHER

The functions f and g are defined, for $x > 1$, by

$$f(x) = (x + 1)^2 - 4,$$

$$g(x) = \frac{3x + 5}{x - 1}.$$

Find

(i) fg(9), [2]

(ii) expressions for $f^{-1}(x)$ and $g^{-1}(x)$, [4]

(iii) the value of x for which $g(x) = g^{-1}(x)$. [4]

OR

A particle moves in a straight line so that, at time t s after passing a fixed point O, its velocity is v ms^{-1}, where

$$v = 6t + 4\cos 2t.$$

Find

(i) the velocity of the particle at the instant it passes O, [1]

(ii) the acceleration of the particle when $t = 5$, [4]

(iii) the greatest value of the acceleration, [1]

(iv) the distance travelled in the fifth second. [4]

© UCLES 2010

WWW.XTREMEPAPERS.NET
www.exam-mate.com

BLANK PAGE

© UCLES 2010

WWW.XTREMEPAPERS.NET
www.exam-mate.com

BLANK PAGE

Permission to reproduce items where third-party owned material protected by copyright is included has been sought and cleared where possible. Every reasonable effort has been made by the publisher (UCLES) to trace copyright holders, but if any items requiring clearance have unwittingly been included, the publisher will be pleased to make amends at the earliest possible opportunity.

University of Cambridge International Examinations is part of the Cambridge Assessment Group. Cambridge Assessment is the brand name of University of Cambridge Local Examinations Syndicate (UCLES), which is itself a department of the University of Cambridge.

© UCLES 2010

WWW.XTREMEPAPERS.NET

www.exam-mate.com